1.DIMENSION OUTLINE

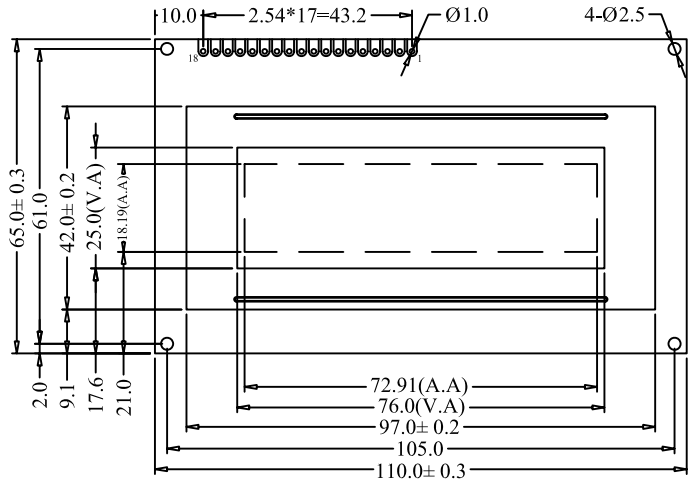

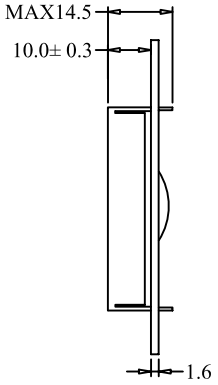

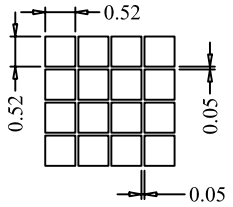

2.MECHANICAL SPECIFICATIONS

ITEM	SPECIFICATIONS	ITEM	REMARK
Module Size(L×W×H)	110.0×65.0×14.5	mm	Reference Dimensional Outline
View Area(W×H)	76.0×25.0	mm	
Effective V/Area	72.91×18.19	mm	
Number of Characters	128×32	-	
Dot Pitch(W×H)	0.57×0.57	mm	
Dot Size(W×H)	0.52×0.52	mm	
Weight (Reflective/Led)	-	g	

3.ABSOLUTE MAXIMUM RATINGS

ITEM	SYMBOL	CONDITION	STANDARD	
			MIN	MAX
Logic Voltage	V_{DD}	**Ta=25**℃	-0.3V	7V
LCD Voltage	V_{LCD}		-0.3V	17.5V
Input Voltage	V_I		-0.3V	V_{DD}+0.3V
Operation Temperature	T_{OP}	—	-20℃	70℃
Storage Temperature	Tst	—	-30℃	80℃

4.BLOCK DIAGRAM MECHANICAL

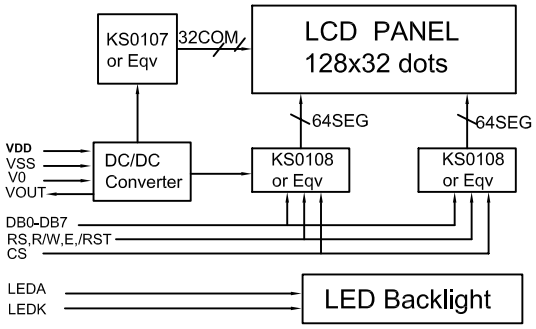

5.LED BACKLIGHT SPECIFICATIONS

ITEM	SYMBOL	TYPE	MAX	UNIT
Ta=25℃ (Yellow-Green LED Light)				
Forward Voltage	V_f	4.1	4.3	V
Forward Current	I_f	200	—	mA
Emission Vave Length	λ_P	568	—	nm

6.INTERFACE PIN CONNECTIONS

ITEM	SYMBOL	LEVEL	FUNCTIONS
1	V0	—	Contrast adjust
2	VDD	+5V	Power Supply For Logic
3	VSS	0V	Power Ground
4	E	H.H→L	Enable signal
5	RS	H/L	H:data L:command
6	R/W	H/L	H:read L:write
7	/RST	L	Reset signal
8	CS	H/L	Chip selection
9-16	DB7-DB0	H/L	Data Bus
17	LEDK	0V	Power supply For LED Backlight
18	LEDA	+5V	

7.ELECTRICAL CHARACTERISTICS

ITEM	SYMBOL	MIN	TYPE	MAX	UNIT
Ta=25℃					
Logic Power	V_{DD}	4.5	5	5.5	V
Input High Voltage	V_{IH}	0.8VDD	—	V_{DD}	V
Input Low Voltage	V_{IL}	VSS	—	0.8	V
Output High Voltage	V_{OH}	2.4	—	—	V
Output Low Voltage	V_{OL}	0	—	0.4	V
Logic Current	I_{DD}	—	6	8	mA
Operation Voltage For LCD	VDD-V0	—	5	—	V